XYZ 3-Axis Ball Screw Linear Stage Gantry Kit

with NEMA 23 Integrated Closed-Loop Stepper Motors for CNC Router

Features

XYZ Three-Axis Motion:
Consists of one X-axis, two Y-axis, and one Z-axis linear sliding tables.

Gantry Structure:
Uses dual Y-axis slides supporting the horizontal X-axis and vertical Z-axis.

Ball Screw Transmission:
Equipped with SFU1605 C7 ball screws with a 16mm diameter and 5mm lead.

Linear Guide System:
Each sliding table uses two MGN12R linear guide rails and two MGN12C slider blocks.

Material Construction:
Aluminum alloy base plates with carbon steel and bearing steel transmission components.

Motor Configuration:
Available with or without four NEMA 23 integrated closed-loop stepper motors.

Axis Configuration:
X and Y axes have the same length.

Linear Stage Specifications

Model:	SXG5080
Configuration:	XYZ 3-Axis Gantry (Double Arm)
Number of Motion Axes:	3
Number of Linear Slides:	4
Transmission Type:	Ball Screw
Ball Screw Model:	SFU1605
Ball Screw Diameter:	16mm
Ball Screw Lead:	5mm
Ball Screw Precision Grade:	C7
Linear Guide Rail:	MGN12R

XYZ 3-Axis Ball Screw Linear Stage Gantry Kit

with NEMA 23 Integrated Closed-Loop Stepper Motors for CNC Router

Linear Stage Specifications (continued)

Linear Guide Block:	MGN12C
Guide Rail Quantity:	2pcs/Slide
Guide Block Quantity:	2pcs/Slide
Moving Platform Size:	50×80mm
Total Slide Length:	Effective Stroke+110mm
Repeat Positioning Accuracy:	0.02–0.03mm (Single Slide)
Maximum Horizontal Load:	50kg (Single Slide)
Maximum Vertical Load:	20kg (Single Slide)
Base Plate Material:	Aluminum Alloy
Ball Screw and Rail Material:	Carbon Steel and Bearing Steel
Compatible Motor:	NEMA 23
Motor Mounting Hole Spacing:	47×47mm
Motor Coupling Bore Diameter:	8mm

Stepper Motor Specifications

Motor Model:	HBT57112C
Motor Type:	Integrated Closed-Loop Stepper Motor
Motor Quantity:	4pcs (With Motor Kit)
Frame Size:	NEMA 23 (57mm)
Holding Torque:	3.2N·m
Supply Voltage:	24–48VDC
Phase Current:	4.5A
Phase Resistance:	0.78Ω
Body Length:	132mm
Shaft Diameter:	8mm
Shaft Length:	21mm
Rotor Inertia:	760g·cm²
Control Signal Voltage:	5–24VDC
Motor Net Weight:	1.78kg

https://www.oyostepper.com

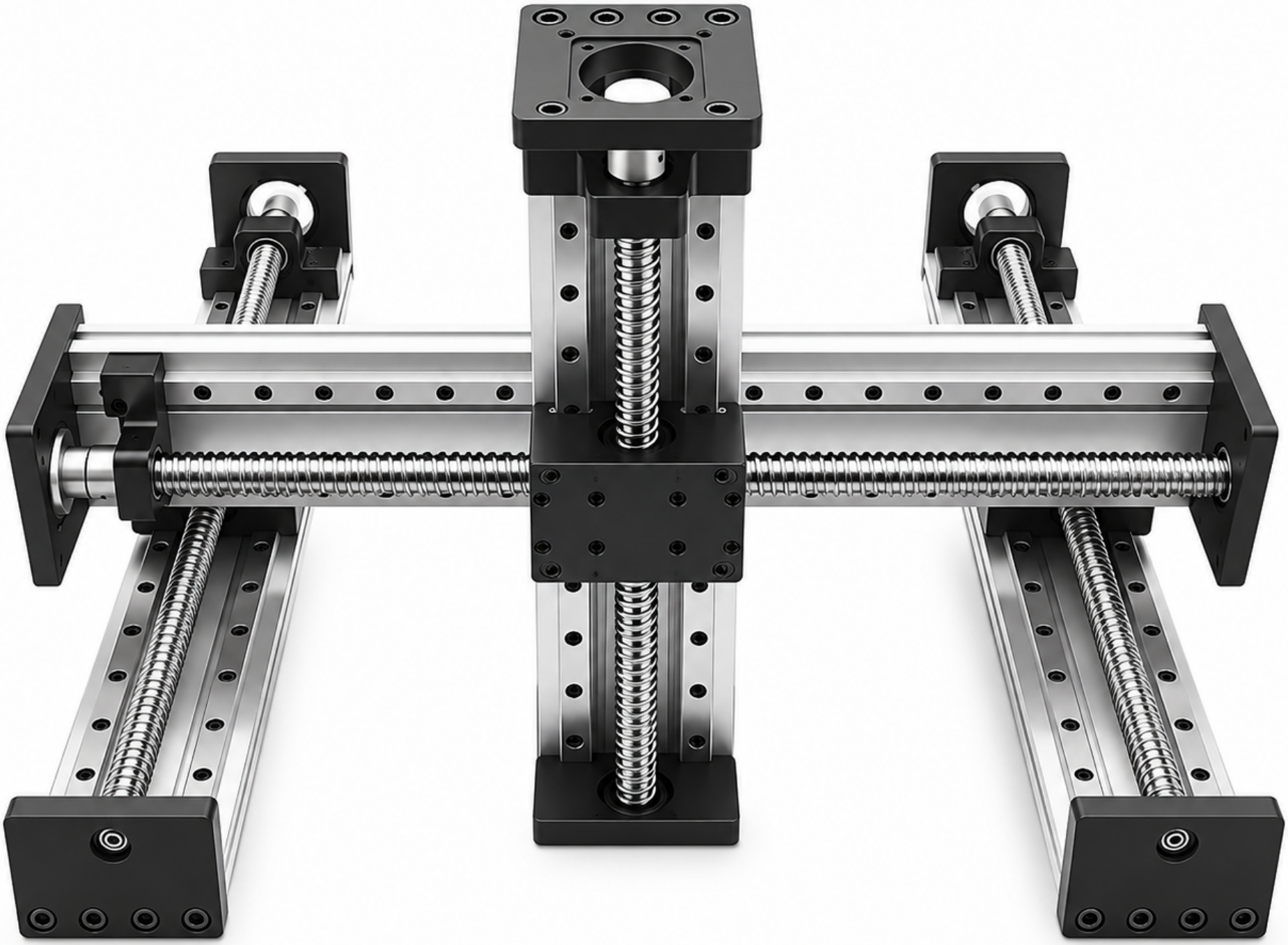

https://www.oyostepper.com

Sliding Table SXG5080 Series

Parameters

Model	SXG5080
Ballscrew type	SFU1605
Total length	Effective stroke + 110mm (Effective stroke + 4.3 inch)
Mobile panel size	2 inch × 3 inch (50 × 80mm)
Horizontal load	Max 110 pound (50KG)
Vertical load	Vertical load: Max 44 pound (20KG)
Ballscrew Repeat positioning accuracy	0.02 – 0.03mm
Supported motor bracket	Compatible with Nema 23
Ballscrew and linear rail material	Carbon steel and bearing steel
Base plate material	Aluminium alloy

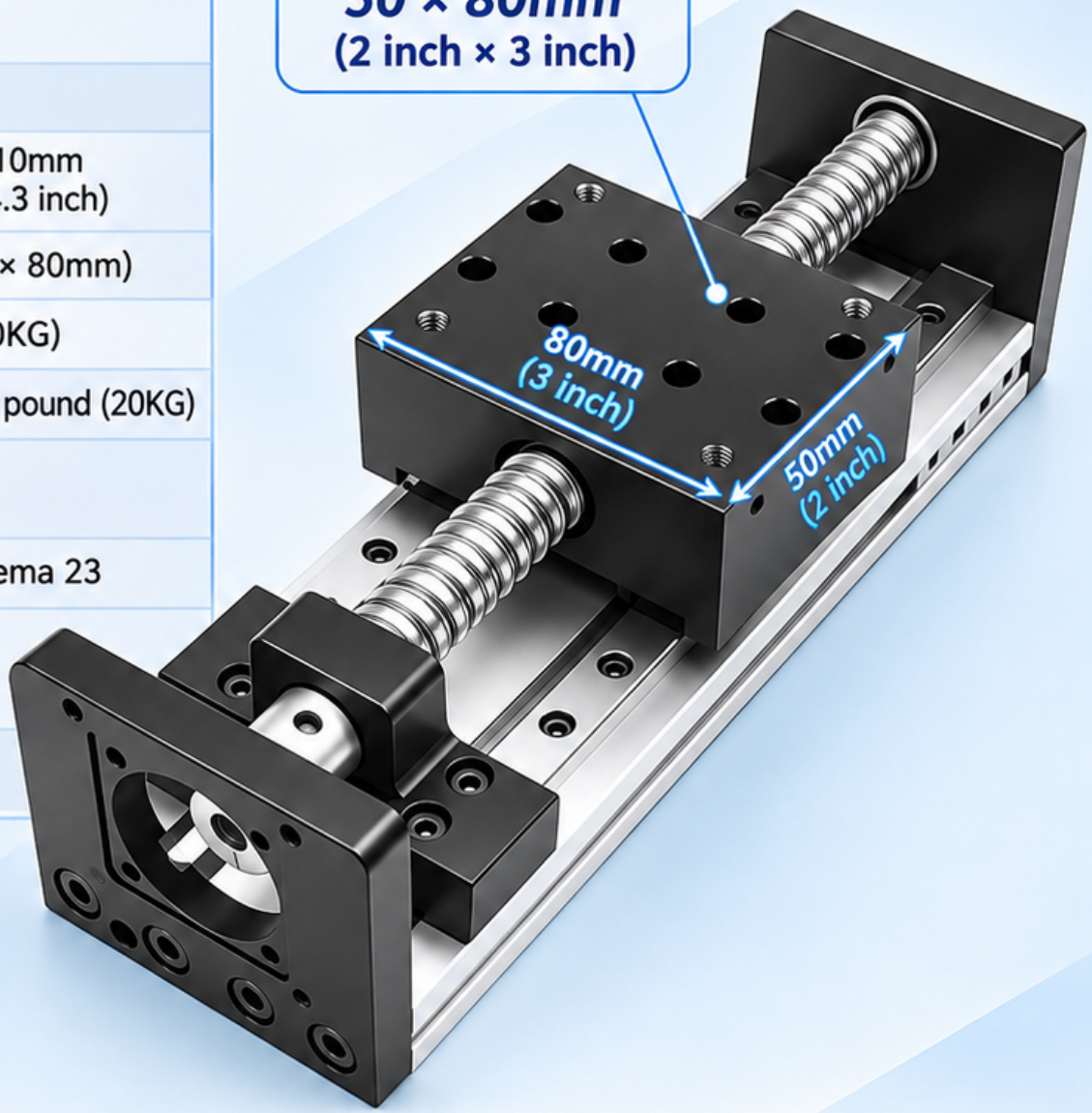

C7 Ballscrew



2 × Rail MGN12R / 2 × Slider MGN12C



https://www.ovostepper.com

Multi-view Product Drawings

Unit: MM

Top View

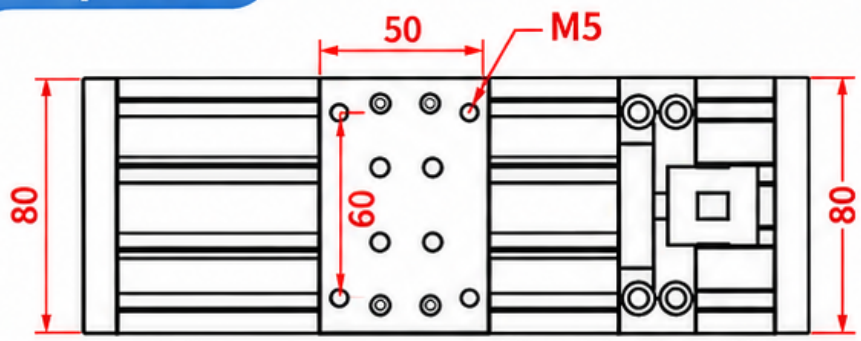

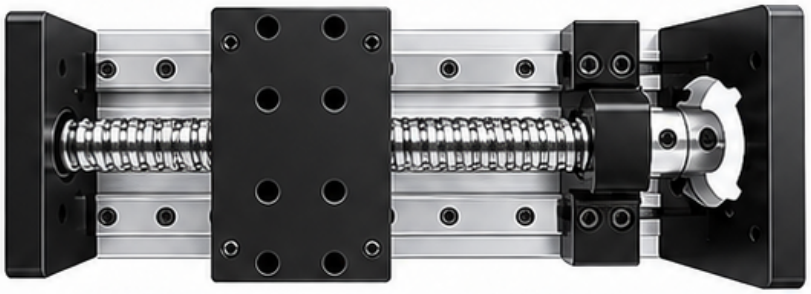

Side View

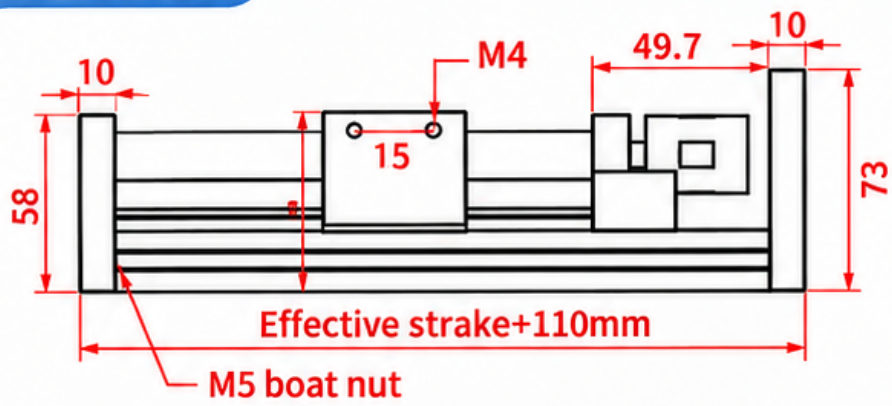

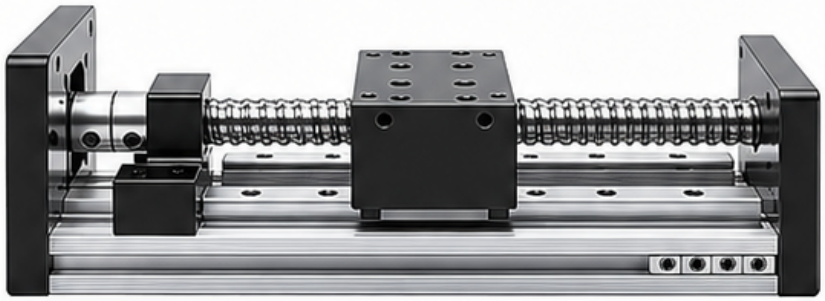

Bottom View

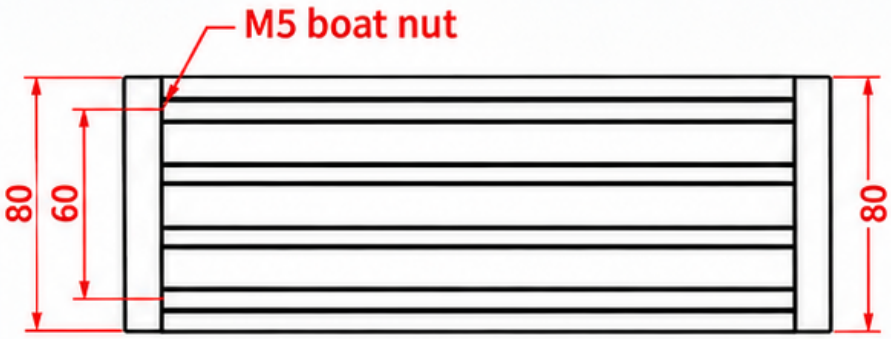



End View

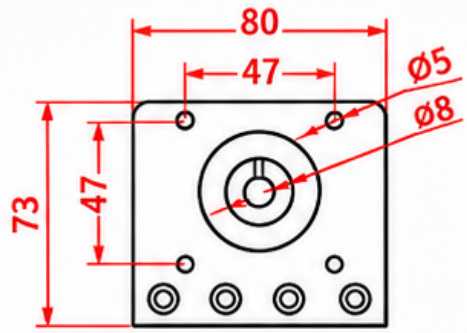

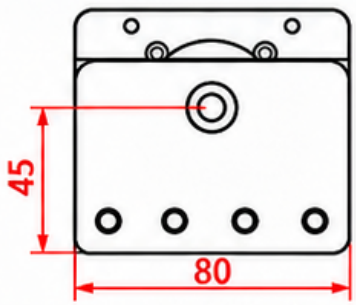

For Nema23 57mm Stepper Motor





https://www.ovostepper.com

Integrated Closed-loop Stepper Motor Driver Parameters & Drawing

Technical Parameters

Model	Holding Torque (N.m)	Body Length (mm)	Flange Size (mm)	Voltage (V)	Shaft Diameter (mm)	Shaft Length (mm)	Phase Current (A)	Phase Resistance (Ω)	Moment Of inertia (g.cm²)	Weight (kg)
HBT57112C	3.2	132	Nema 23 57mm	24-48DC	8	21	4.5	0.78	760	1.78









https://www.oyostepper.com

Integrated Closed-loop Stepper Motor

Dimensions – Side View (Drawing)

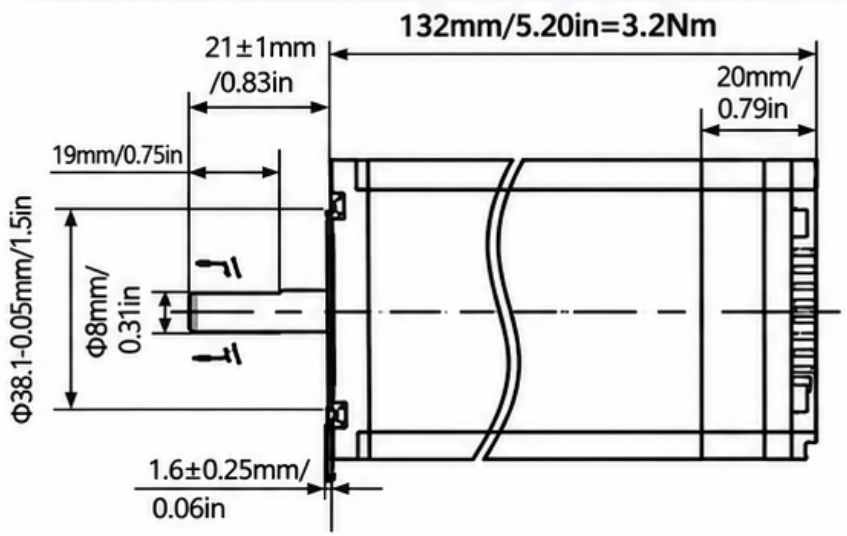

Product View (with Dimensions)

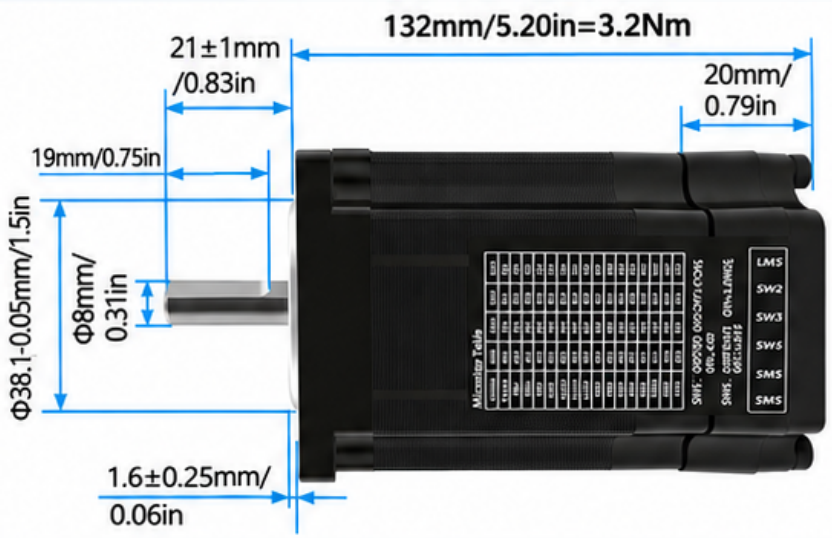

Front View (Mounting Face)

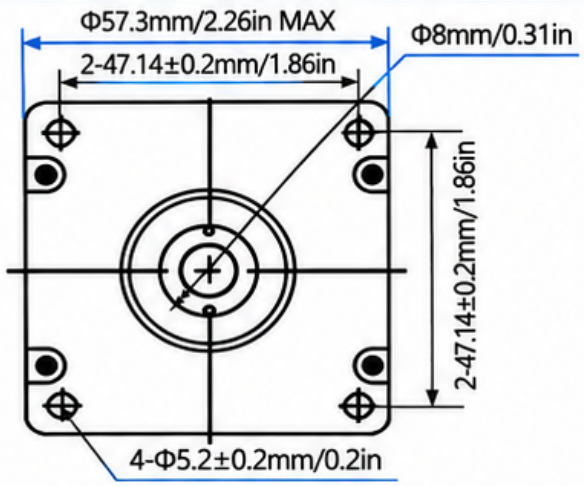

Front View (Face with Shaft)

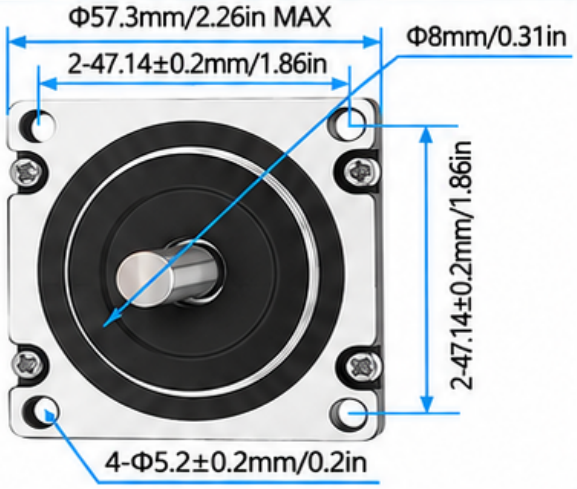

Shaft Detail

8mm Shaft Diameter

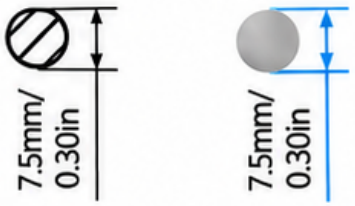

Wiring

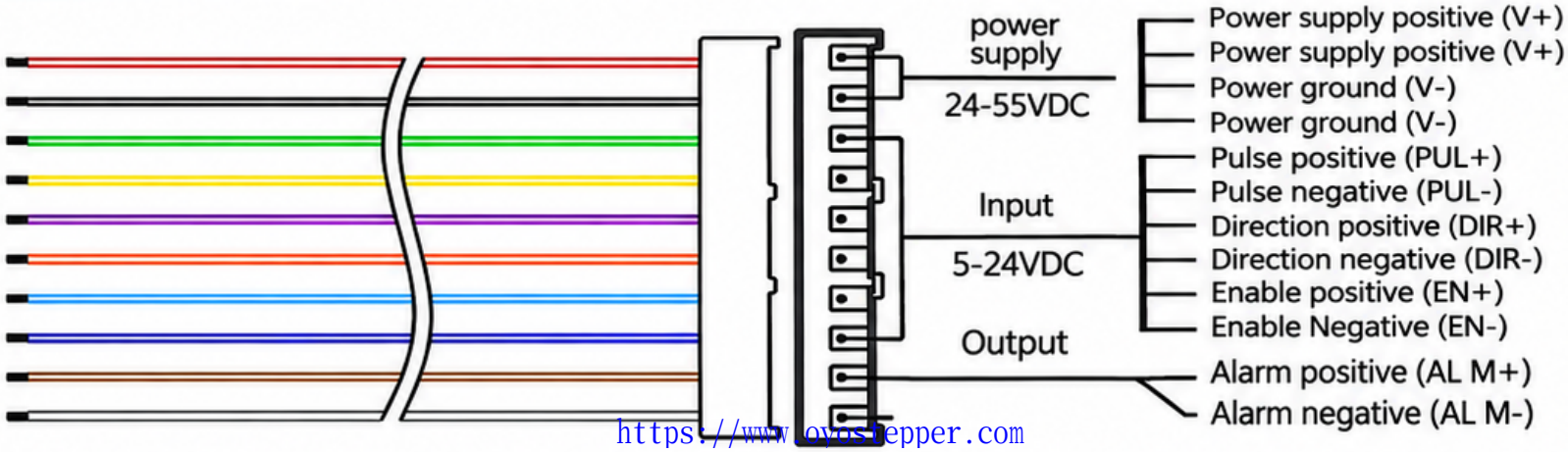

https://www.ovostepper.com

Closed-Loop Stepper Motor 3.2Nm

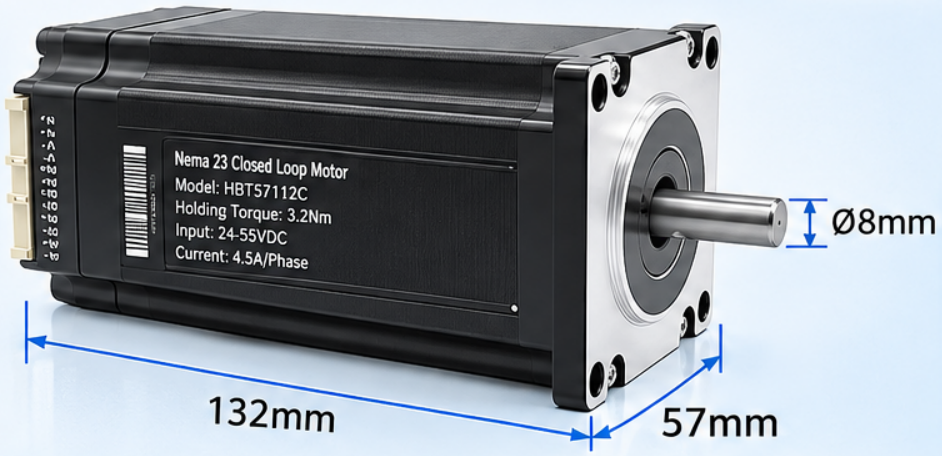

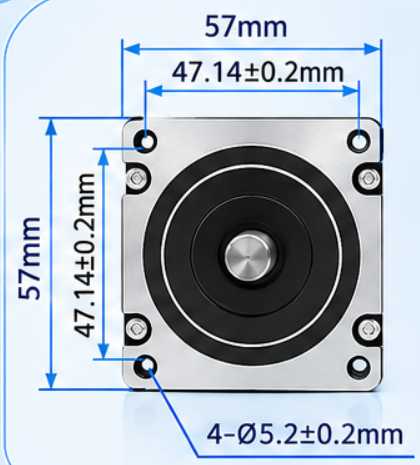



Torque Curve

Speed (r/min)	Torque (N·m)
0	3.20
500	1.90
1000	1.10
1500	0.74
2000	0.50
2300	0.40

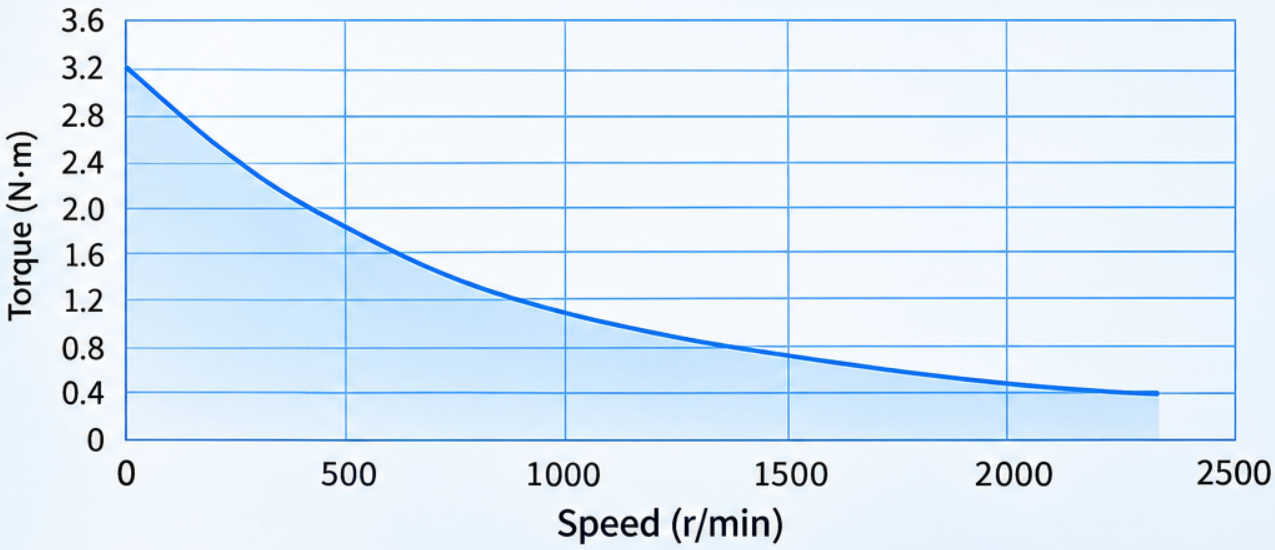

https://www.oyostepper.com